Creativity Support: Insights from the Practices of Digital-Atomic Artists

R. T. Jim Eales
School of Computing Science, Middlesex University
The Burroughs, London NW4 4BT
+44 (0)20 8411 4396
j.eales@mdx.ac.uk

Dharani Perera
School of Engineering and IT, Deakin University
Burwood,
VIC3125, Australia
deehansika@gmail.com

ABSTRACT
The support of human creativity by information and communication technology is an important and interesting area for research. To advance our research in this complex area our approach has been to go back to first principles and study examples of creativity in action. In this paper, we describe in some detail the creative practices of two artists. Their work is particularly interesting to us because of the way it straddles the digital-atomic border. Their creative practices involve not only manipulating paint atoms but also manipulating digital bits. From these studies we identify a number of interesting creativity support areas that suggest further investigation.

Categories and Subject Descriptors
J5 [**Arts and Humanities**]: Fine arts.

General Terms
Design.

Keywords
Creativity support systems, creativity, artist case studies.

1. INTRODUCTION
Our research focuses on the IT-based *support* of creativity. We are currently working on the design and development of what we describe as *creativity-support systems*. In our efforts to develop an understanding of human creativity, we have found that the creativity research literature, although extensive, offers little direct assistance for our specific research objectives. Mayer [13 p. 458] summarises our feelings when he suggests that "although creativity researchers have managed to ask some deep questions. They have generally not succeeded in answering them". In an attempt to make some headway in our research quest, our strategy has been to seek out and study first-hand examples of creativity in action: People engaged in various creative activities who are prepared to share the details of their creative practice with us. Our previous creativity studies include those reported by Eales [7] and Eales and Perera [8] (see also the study by Bowen [1]). From these descriptive accounts we hope to discover valuable abstract principles of creativity support that can form the basis of our designs for creativity support systems.

Examples of human creativity are all around us, but it is often difficult to isolate and observe them. As a starting point we have chosen to study the creative practice of established artists. For the purposes of our research, artists have the advantage of clearly defined and usually fairly stable creative processes. They may also be particularly innovative in their use of technology to support these processes. However, we wish to emphasise that we are interested in the technological-support of a whole range of creative activities and not just those that take place within the artistic sphere. In our studies of artists, we have found that those straddling the digital-atomic border to be of special interest. By this, we mean that in their creative practices, at certain points they are manipulating digital bits and at other times they are manipulating paint (or other) atoms, hence the digital-atomic border. We have chosen the term 'digital-atomic' mostly for effect. It should perhaps be termed the digital-physical border, but we do often refer to the artists manipulating paint atoms. This border area seems to be an interesting and fruitful artistic zone, but we believe it also has particular significance for those investigating the IT-based support of creativity. Two such artists working in this border zone are Jill Lewis and Enda O'Donoghue, whose creative practices are the focus of this paper.

Why should we attempt to support creativity? Creativity is a defining human characteristic and a fundamental part of human development. There is a strong argument for supporting creativity because of its intrinsic value. However, recent studies have also highlighted the increasing economic significance of creativity. Florida [9] maintains that creativity is the driving force of economic growth; it is the decisive source of competitive advantage. We often underestimate the economic significance of creative industries. In Britain, for example, the music industry employs more people and generates more wealth than the car, steel or textile industries (Howkins [12]). We believe that there are enormous opportunities for new technological systems that support a wide range of creative activity.

2. CREATIVITY SUPPORT
Information technology has an important potential role as a tool (or system) to support people working in many different areas of creative endeavour. In our own investigations we have been particularly influenced by the extensive work of Candy and Edmonds in the area [2, 3, 4, 5] and Shneiderman's research on Creativity Support Tools [14, 15].

We consider our model (Figure 1) to be a useful way of illustrating our particular area of interest. We will attempt to explain this diagram. The horizontal scale represents what we

Published by the British Computer Society
People and Computers XXI – HCI… but not as we know it: Proceedings of HCI 2007
Linden J. Ball, M. Angela Sasse, Corina Sas, Thomas C. Ormerod, Alan Dix, Peter Bagnall, and Tom McEwan (Editors)

term the scope of creativity, from individual to collective. Creativity is often considered to be a very individual experience; for example, many artists insist on working in isolation. On the other hand, many created objects such as software, architectural or engineering designs and advertising campaigns are the collective result of whole teams of workers. This horizontal scale serves as a valuable reminder that we must consider the collective as well as the individual dimension when fully considering the support of creativity.

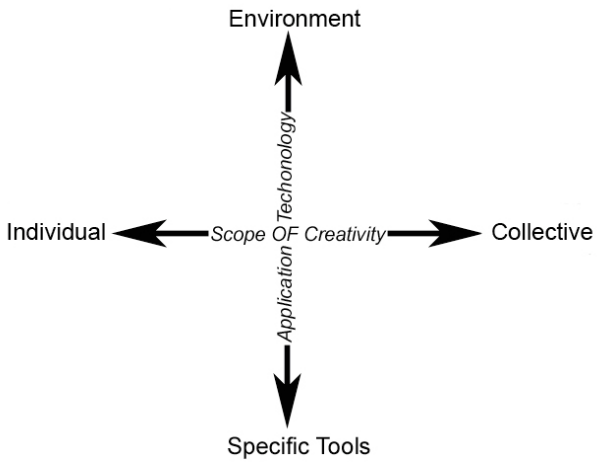

Figure 1. Creativity support systems.

The vertical scale represents the level of application of technology in the support of creativity, from specific tools to general environments. At the bottom of the scale we are thinking of specific tools such as image-manipulation programs or perhaps mind-mapping software. At the top of the scale we are thinking of what we term computer-supported creative environments. Many creative people find that the best way to support their own creativity is to establish a conducive creative environment. Czikszentmihalyi [6] has suggested that it is easier to enhance creativity by changing the conditions in an environment than it is by trying to make people think more creatively. So this scale reminds us to think not only about specific computer tools but also about developing technology-enhanced creative environments.

An interesting development of our model (Figure 1) is to consider what the four corners or quadrants of the diagram might represent in technological terms.

Individual tools – Computer-based tools that support the individual to be creative in various ways.

Collective tools – Distributed tools that support widely distributed groups to work on collective designs.

Collective environments – Computer-supported collective creative environments, perhaps using communications technology to allow widely distributed groups of people to share a virtual creative environment.

Individual environments – Computer-supported creative environments, perhaps using ubiquitous and pervasive technology to generate inspirational physical environments.

Clearly there are many factors that can have an effect on creativity other than technology. Various social, cultural, economic and other influences can enhance or stifle human creativity. The support of creativity by information and communications technology is our chosen focus for research, and our ultimate objective is the design and development of technological systems to support and enhance creativity. There are clearly tremendous opportunities for the technological-support of creativity, but we do not believe that these systems will generate creativity where none exists or that people cannot be equally creative without technological support.

3. RESEARCH FRAMEWORK

Although our ultimate aim is to design and develop new tools that support creativity, our objective for the research outlined in this paper was to simply record and understand the existing creative practice of the artists studied. We made no attempt to introduce new technology or to suggest different ways of using existing digital technology. We wanted to record an external investigator's perspective of their existing creative practice.

We interviewed the artists sitting at their computers where they demonstrated various techniques, and also in their studios. The interviews were tape-recorded and later transcribed. We also took digital photographs mainly of their studios and various tools. We have found that artists generally do not like to be observed while they are painting. Fortunately both artists had recorded the detailed stage-by-stage development of specific paintings using a digital camera. These images were a valuable way of understanding the artists' creative processes and grounding our interviews.

While we are extremely interested in their paintings and the wider meaning of their art, our focus was deliberately on the creative processes of these artists. Although we wanted to study established and important artists, we have tried not to get drawn into issues of artistic style, influence or relevance. For us, what became the most important factor was trying to capture and understand the interplay of when they were manipulating digital bits and when they were manipulating paint atoms. In the next sections we describe in detail the creative processes of the two artists.

4. JILL LEWIS

We consider Jill Lewis to be an exemplar case of information technology being used in the support of creativity. Jill is a full-time Australian artist working in the traditional medium of paint on canvas (see www.libbyedwardsgalleries.com and Figure 2 for examples of her work). She regularly exhibits in Melbourne, Sydney and Brisbane. Jill's paintings are generally large, colourful canvases depicting primitive animal characters and human figures. These images represent people and situations from Jill's memories, dreams and relationships. This undoubtedly has implications for her general creative practice since she needs to create the conditions for these images to emerge from her conscious and unconscious mind as the painting develops. Jill has created a large studio in her house. She regularly uses her computer and peripherals, situated in a corner of the studio, to assist her in her painting. Jill has no background in computing, although she is not frightened of experimenting with the use of her computer and related digital devices.

Jill has essentially used digital technology to create her own ad-hoc creativity support system. In our study of Jill's use of this technology, two significant and separate areas of creativity support were evident. Sometimes, when she is in need of inspiration, Jill will investigate ideas for new paintings using her computer. We have described this as *electronic collaging*. She generally starts by collecting a series of mostly random scanned images. For example, she will open a magazine at a random page and scan that page. She will also scan random images from books, her paintings, her sketchbook and even

physical objects such as leaves. These images, or more likely just parts of these images, will be arranged into collages on the computer screen. If she particularly likes an image generated on the computer in this way this will form the basis of a new painting.

Figure 2. A Jill Lewis painting.

Sometimes during the painting of a canvas, switching the composition from paint atoms on canvas to a digital representation offers her a number of advantages. We have termed this *media switching*. To achieve this she takes a photograph of her painting using a standard digital camera. She uploads this image into image editing software on her computer. Jill then uses the software tools to work on the digital image exploring possible compositional changes. Generally a switch to a digital representation is prompted by a perceived major problem with the composition of her painting. After she has decided on the changes she intends to make to her painting, she produces a coloured printout of the image generated on the computer. This then becomes a 'working sketch' for changes to her painting.

5. ENDA O'DONOGHUE

Enda O'Donoghue is an Irish artist currently living and working in Berlin, Germany. He originally studied computer programming before taking up visual art. As well as painting, he has worked and exhibited in a wide variety of media including photography, video, sound, installation, public art and interactive media. Examples of his artwork can be found on his website www.endaism.com (also see Figure 3). His particular skills and experience mean that he is perfectly at home on either side of the digital-atomic border, and, indeed, his artwork often exploits the anomalies and effects produced when a created object crosses this border. Recently Enda has produced a collection of paintings created from digital photographs 'found' on the Internet. In our description, we have broken his overall creative process into three stages. We have termed these stages: finding an image, manipulating the image and creating the painting.

The images that form the basis of Enda's paintings are all 'found' on the Internet. With the development of photo-sharing sites, photo-blogs and moblogs (mobile phone weblogs) there is an ever-increasing online photographic gallery capturing every nuance of people's lives. Enda particularly values the images taken by phone-cameras because they are often of mundane or banal scenes and of low resolution with associated image defects. Recently Enda has concentrated on images of scenes from modern urban environments, for example, supermarkets, waiting rooms, or travelling on trains and aeroplanes. These everyday scenes are at once familiar to anyone living in a similar environment but at the same time they are also unfamiliar in that they are someone else's photos from someone else's life.

Figure 3. An Enda O'Donoghue painting.

When Enda finds an interesting image on the Internet he captures it on his computer along with associated information such as its web address, its title and its author. From his collection of captured images he will print out those that he thinks have potential to form the basis of a painting. These images are printed on a colour printer in his home at around postcard size. These postcards are then taken to his studio and mounted on an 'image wall' that contains 200-300 images under consideration.

After he decides on an image that he intends to paint and before he starts to actually paint, Enda engages in a short intermediate second stage where he investigates possible visual distortions or degradations to the chosen image. These degradations or glitches are achieved by applying various filters in Photoshop that mimic digital distortions, what Enda terms 'degenerative and erosive noise effects'. Typical distortions are bands of contrasting colour, areas of blurring or overexposure and the misalignment of picture elements. One technique that Enda uses to explore general ideas for digital distortion is to view websites and images through a program called a Glitch Browser. This piece of software deliberately introduces glitches into viewed images in a programmed way. As a basis for his painting, Enda produces two A4 colour printouts as 'working sketches'; one is of the 'found' image in its original form and the other is of the manipulated image incorporating various digital distortion effects.

The third and most time-consuming stage is painting. To start a painting, Enda produces a 35mm slide from the original 'found' image and projects this onto a canvas (typically 150cm x 120 cm) using a slide projector. He then traces out the main elements of the image onto the canvas using charcoal. He also draws a grid onto the canvas and a corresponding grid onto his

two working sketches (printouts of the original image and the modified image). This grid is for location purposes and also forms the basis for dividing up sections of the painting to be painted. Sections of the canvas are masked off using masking tape and each section is painted as a single entity. Sections of the image are selected to emphasise distortion and introduce digital effects; often the distortion is created by selecting sections that cut across significant parts of the image. Part of Enda's creativity is undoubtedly in how he chooses a section and how he paints that particular section. Painting in these discrete sections tends to introduce large-scale banding and pixelation effects, but he also introduces other digitally influenced effects. Straight lines in the painting take the form of pixelated steps, a common digital defect known as aliasing or jaggies. To help him to achieve the regularity of these steps he uses plastic templates or stencils, a different template for each angle. To introduce small-scale pixelation effects he uses stamps made from rubber matting, which he uses to blend and stamp the paint while still wet. The final painting built-up step-by-step using this process is a rich mosaic of colour and texture.

6. IMPLICATIONS FOR CREATIVITY SUPPORT

Although the creative processes of artists like Jill Lewis and Enda O'Donoghue fascinate us, our primary objective is the design and development of creativity support systems. These studies are the basis for the development of abstract general 'principles' or ideas for creativity support, and hopefully these principles can inform the design of future creativity tools. The process of recognising and isolating general creativity support principles from the creative practices of these artists is no easy task. From the complexity of the overall process it is hard to decide if a sub-process is only of value to that particular artist, only has value within visual art practices, or perhaps has much wider importance and application. Our approach has been to identify interesting sub-processes for further investigation while reserving judgement on their ultimate value or range of applications.

In an attempt to analyse processes with a little more rigour we have developed a simple diagrammatic system for representing the creative practices. These diagrams can be used in the explanation of particular creative processes; they allow us to ensure that we have captured the complete process and also allow us to isolate and illustrate interesting sub-processes. We will now attempt to outline the symbols (see Figure 4) we have used in our diagrams. Both the artists, described in this paper, work in what we term the digital-atomic border zone. In the diagrams the border runs down the centre; to the left is the atomic zone where atoms are manipulated and to the right is the digital zone. The circles represent stages in the development of the created object (in these cases a painting). The arrowed lines represent different kinds of transformations of the created object. The small images show the devices used to convert digital to atomic or atomic to digital. The double broken lines entitled compositional influence perhaps need explaining. This part of the process occurs when the artist uses an image on the computer screen (or a printout) as the basis for changes to the painting. In this case the artist acts as the transition device from digital to atomic.

In the next sections we will outline a number of what we feel are interesting creativity sub-processes identified from the practices of the two artists.

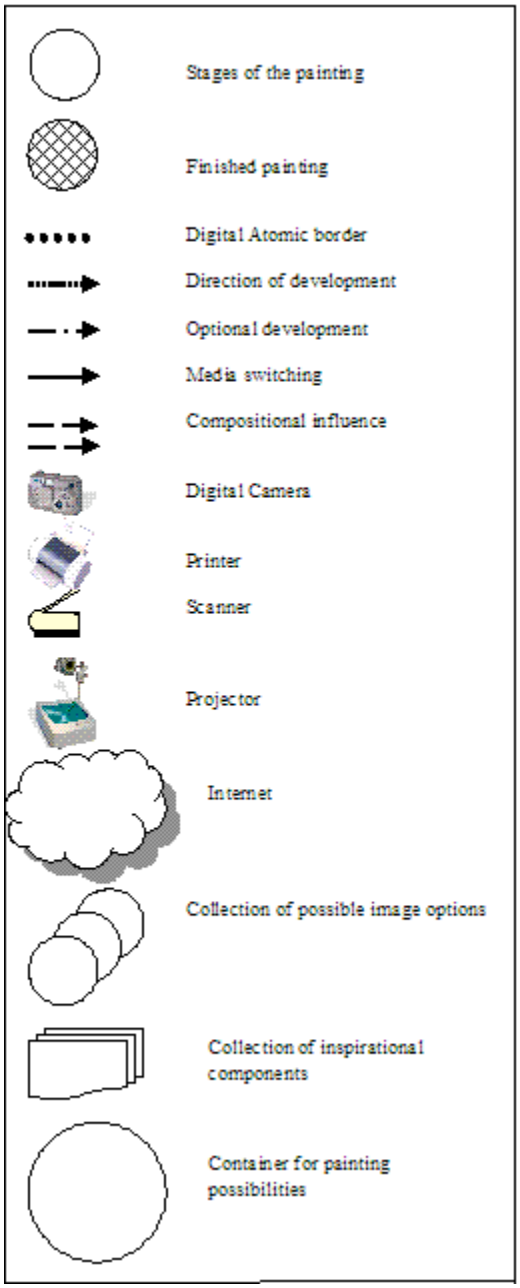

Figure 4. Key to diagrams.

6.1 Media Switching

The first sub-process of interest is what we term media switching, where the created object is moved from physical form to digital form or vice versa. Most artists working on the digital-atomic border are exploiting media switching in some way or other. For Enda, his creations begin as digital images and he converts them to arrangements of paint atoms on canvas, ironically imitating digital distortion effects in his painting style. The initial digital form of the image allows it to be captured in an instant and potentially viewed by everyone who has access to the Internet. Finally, his painting has a digital form once again when he adds a digital photograph of his finished artwork to his virtual gallery.

For Jill Lewis her created object evolves as she works on it. She rarely starts with a finished image in her mind. One of the side-effects of this is that a rich and complex series of colours, patterns and textures tends to be built up on the canvas. She

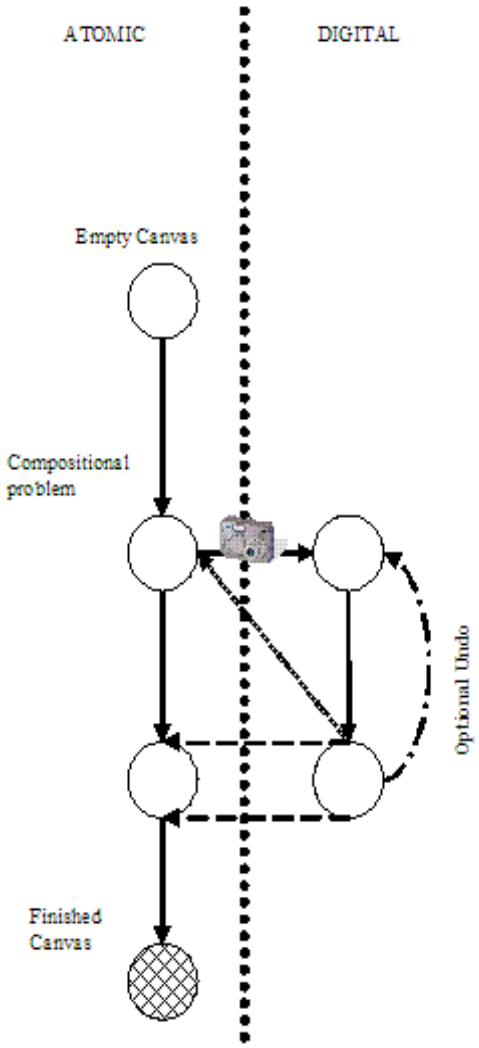

Figure 5. Media switching.

considers this to be one of the trademarks of her work and a valuable asset to be conserved. There is always the risk that she will make 'unsuccessful' changes to her composition and lose valuable parts of her painting. By taking a digital photograph of her painting and then experimenting with compositional changes to the digital image her painting remains unchanged during experimentation (see Figure 5). In this case the principal advantage of media switching appears to be that the digital medium supports *experimentation with conservation.* Any changes that do not work can simply be undone. This encourages her to take more compositional risks. Painting, of course, also supports experimentation, but without conservation.

Apart from conservation, switching to digital during the development of her painting also provides a number of other advantages for Jill:

- It provides speed of experimentation. It is much quicker, for example, to change a background colour on the digital image than it is to do a similar operation on the physical painting.

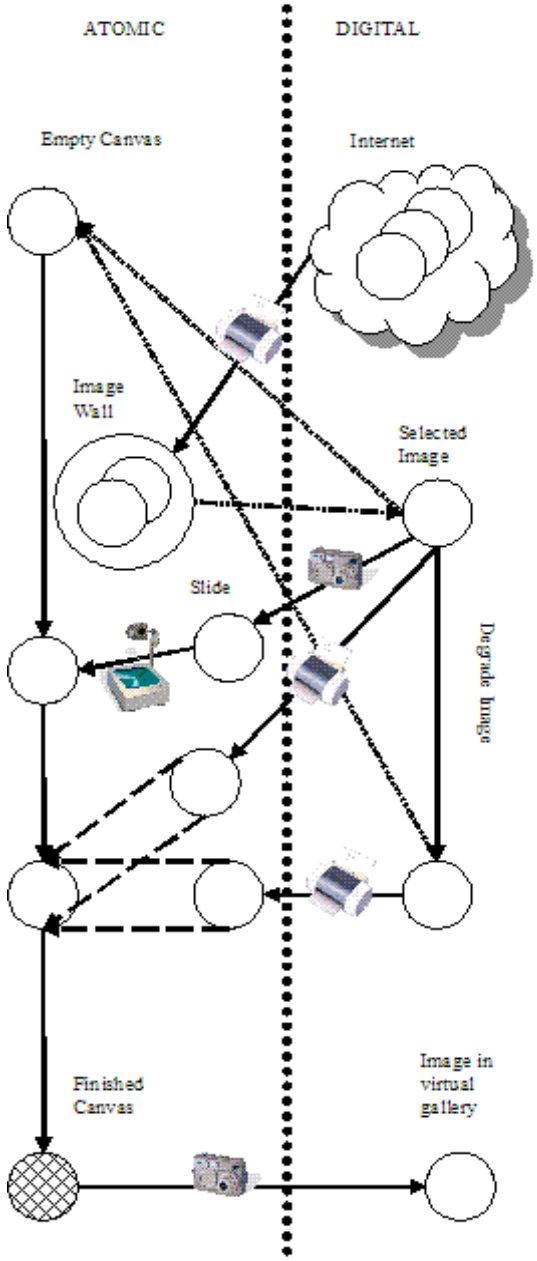

Figure 6. Enda's creative process.

- Pixels are also easier to change or overlay than paint. Colour can be quickly changed without problems of drying times or colours showing through.
- The very act of switching the painting to a computer screen also changes the viewing distance. This allows the artist to critically view the painting from a different perspective.
- Sometimes Jill will rotate the canvas in extreme cases of compositional anxiety; this is much easier to achieve with an image on a computer screen.

There are, of course, disadvantages associated with media switching. Perhaps the most significant is the loss of texture and associated detail that are such important attributes of paintings.

When using the computer to explore the development of her painting she tends to focus mainly on composition and colour.

There appear to be so many advantages associated with the digital side of the border that one wonders why these artists bother to work on the atomic side at all. Although the process of painting on canvas is around 500 years old it still has a number of marked advantages. A painting suggests permanence, originality and authenticity, which has a strong influence on perceived value. It is a stable, often large-scale, wall-based form of representation that is widely accepted as 'art'. For both artists, painting also allows them to exploit their undoubted painting skills that have been developed over many years.

However, a painting's atomic nature is a serious disadvantage when it comes to exhibiting the work. It can only be in one place at one time. By converting a painting back to a digital image this image can be viewed (and bought) by potentially anyone who has access to the Internet.

We believe that some form of media switching, exploiting different sets of advantages associated with different media, should be at the very heart of creativity support.

6.2 Multiple Alternative Representations

For Enda the Internet acts as an almost endless virtual gallery of possible images that he can use as the basis for a painting. There are so many people taking digital photographs and uploading them to the Internet that it can be considered as an almost limitless generator of every possible image. Clearly it is not limitless but the number of online images is vast and is growing every day. He is essentially tapping into a collective visual brainstorming tool. Participants may have many reasons for uploading their images to the Internet, but this variety of purpose does not interfere with Enda's own use of these images. He captures interesting images along with their associated details on his computer. Small printouts of the most interesting images are added to his 'image wall' in his studio from which he selects an image to paint.

In Enda's creative practice (see Figure 6), this use of the Internet acts as a source of multiple alternative representations of possible solutions to his essential creativity problem, finding an image to paint. This is very similar to a known requirement for creativity-support suggested by researchers in the area. Candy [2] included 'access to multiple representations of the data' in her checklist for the design of systems to support knowledge workers. Hewett [11] echoes Candy's requiremen, and adds the related need for these representations to be simultaneous so that they can be compared, tested and evaluated. Clearly Enda's creative practice exploits the multiple alternative images available simultaneously on the Internet.

6.3 Chance and Choice

Sometimes, when she is in need of fresh inspiration, Jill Lewis will develop new ideas for paintings using her computer. She may spend a week on the computer just investigating ideas. We term this *electronic collaging* (see Figure 7), but this, of course, is a form of specialised media switching. In this case, it happens before a painting is started. She generally starts by collecting a series of mostly random scanned images. For example, she will open a magazine at a random page and scan that page. She will also scan random images from books, her paintings, her sketchbook and even physical objects such as leaves. These images, or more likely just parts of these images, will be arranged into a collage on the computer screen. She values the ease of manipulation and the ability to rescale the images, but

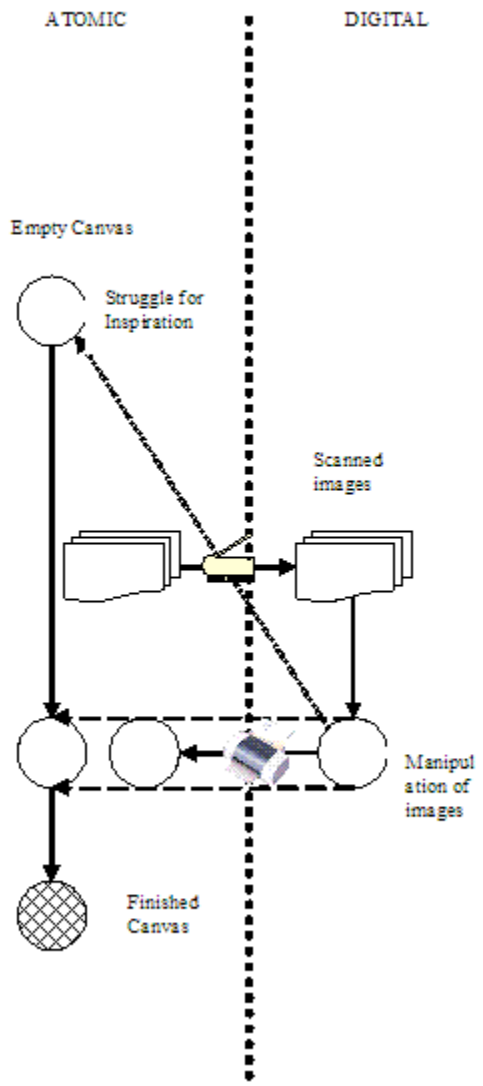

Figure 7. Electronic collaging.

of perhaps most importance is the unpredictability of the process. Images get distorted in unexpected ways. An image will overlap in a different way or at a different scale; a colour will bleed into another area etc. Sometimes she rejects or undoes these unexpected occurrences but at other times she welcomes these 'mistakes': hence chance and choice.

In a limited problem space it may be possible to generate every possible solution, but in most situations there is always an element of chance in terms of the solutions generated or indeed 'found'. There are many examples in the history of creativity and discovery where chance has played a significant part. In the history of art, the Dadaists, Surrealists and Cubists often used chance as a basis for their artwork. For example, Schwitters created collages from objects that he found on his daily walks. His collages included tram tickets, playing cards, envelopes, pieces of string etc. (Gale [10]). Enda's use of the term *found* for his images suggests an element of chance in their discovery. In creativity support, chance seems to be an important ingredient. However, solutions or developments generated by chance have to fall within appropriate constraints otherwise they are of little value.

7. CONCLUSIONS

We have attempted to outline the creative practices of Jill Lewis and Enda O'Donoghue in some detail. The artwork of both artists occupies an interesting position on what we have termed the digital-atomic border. Because of this position we believe their creative processes are of particular value in our investigation into the IT-based support of creativity.

In the development of our research objectives we need to undertake further studies of interesting and relevant creativity practices; also we need to further analyse and refine our creativity support 'principles'; and most important of all, we need to apply these principles to IT-based prototypes of creativity support systems.

In conclusion, we can say that research into the area of creativity may well be extremely difficult with numerous problems to overcome, both in understanding creativity and designing supporting technology, but the potential benefits of successful creativity support systems are enormous. However, what does seem to be in particularly short supply is the initial creativity to be able to design and develop these innovative creativity support systems.

8. ACKNOWLEDGMENTS

We would like particularly to thank Jill Lewis and Enda O'Donoghue for their help and patience.

9. REFERENCES

[1] Bowen, T. Making art in a digital/cyber culture: Exploring the dialectic between the manual creator and the digital self. *Digital Creativity, 14* (4), 2003, 219-227.

[2] Candy, L., and Edmonds, E. Creativity in Knowledge Work: A process model and requirements for support. In *Proceedings of OZCHI'95*. (Wollongong, Australia). 1995, 242-248.

[3] Candy, L. Computers and creativity support: Knowledge, visualization and collaboration. *Knowledge-Based Systems, 10* (1997), 3-13.

[4] Candy, L., and Edmonds, E. Creativity enhancement with emerging technologies, *Communications of the ACM, 43*, 8 (2000), 62-65.

[5] Candy, L., and Edmonds, E. *Explorations in Art and Technology*. London, Springer-Verlag, 2002.

[6] Czikszentmihalyi, M. *Creativity: Flow and the Psychology of Discovery and Invention*. HarperCollins, New York, 1996.

[7] Eales, R. T. J. Creativity in action: Some implications for the design of creativity support systems. In *Proceedings of CHINZ'05*. (Auckland, NZ). 2005.

[8] Eales, R. T. J**.,** and Perera, D. Postcards from the digital-atomic border: A study of creativity in action. In *Proceedings of IADIS international conference – Interfaces and HCI*. (Lisbon, Portugal). 2007.

[9] Florida, R. *The Rise of the Creative Class*. Pluto Press, North Melbourne, 2003.

[10] Gale, M. *Dada and Surrealism*. Phaidon Press, London, 1997.

[11] Hewett, T. T. Informing the design of computer-based environments to support creativity. *International Journal of Human-Computer Studies, 63* (2005), 383-409.

[12] Howkins, J. *The Creative Economy: How people Make Money from Ideas*. Penguin, London, 2002.

[13] Mayer, R. E. Fifty years of creativity research. In R. J. Sternberg (ed.), *Handbook of creativity*. Cambridge University Press, Cambridge, UK, 1999.

[14] Shneiderman, B. Creativity support tools. *Communications of the ACM, 4*, 10 (2002a), 116-120.

[15] Shneiderman, B. *Leonardo's Laptop: Human needs and the New Computing Technologies*. MIT Press, Cambridge, MA, 2002b.